47" AND 60" ROTARY BROOMS WITH 18" DIAMETER BRUSHES *(Figures 1-1a)*

NOTE: The Brush kit may contains 1 more brush, as to compensate, if necessary, for the variations in the brush tolerance.

Important: Replace the brushes when the diameter reaches 10".

1. Place the tractor/equipment on level ground, place transmission in neutral, wait for all movement to stop and apply parking brake.
2. Raise the broom to its maximum and turn it completely to the left. Securely support with stands or suitable blocking. Do not rely on hydraulically supported devices for your safety. They can settle suddenly, leak down, or be accidentally lowered. Shut off the engine and remove the ignition key.
3. Remove the two bolts (item 2) and withdraw the chain guard (item 1).
4. Remove the right side of the broom (item 5) by unscrewing the three nuts (item 4), the nine bolts (item 3), the lockwasher and the nut (item 6).
5. Remove the bearing and the flanges (item 13) by unscrewing the two setscrews from the bearing.
6. Remove the retaining plate (item 7) by unscrewing the three bolts (item 8).
7. Remove the brushes by sliding them towards the outside of the brush support (item 11).

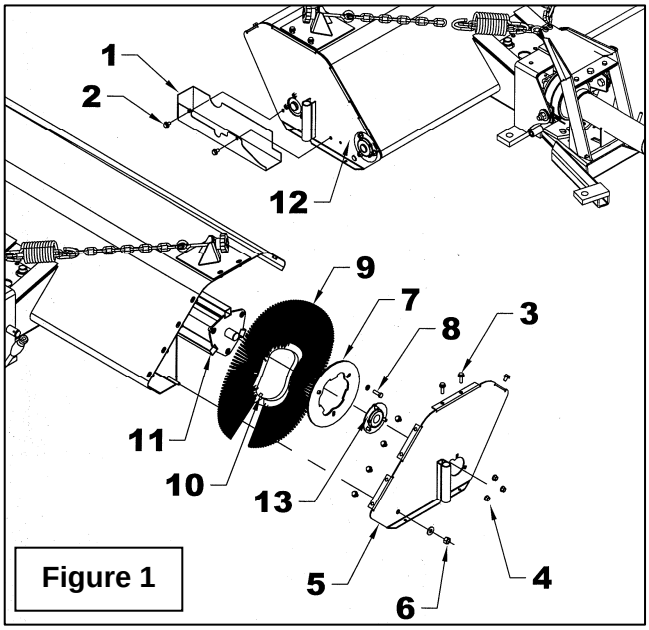

Figure 1

8. Begin installing the wafers on the brush support, ensuring the drive pins of each wafer section lock the wafer over one of the brush support's drive bar.
9. Install each brush (item 9) in the opposite direction of the one next to it (see **Figure 1a**). The two pins on each brush (item 10) that secure the brushes to the support must be alternated 120° (1/3 of a turn) to obtain a balanced distribution on each of the support's three square tubes (item 11).

IMPORTANT: If you decide to install half steel/half polypropylene brushes, you must start and finish with a polypropylene brush**.**

10. Install the retaining plate (item 7) by tightening the bolts (item 8) and lockwashers firmly.
11. Install the bearing and the flanges (item 13) on the right side (item 5) and reinstall the right side of the broom. Tighten the bearing setscrews (item 13).
12. Check the condition of the chain and realign the chain tensioner (item 12).
13. Reinstall the chain guard (item 1).

IMPORTANT: While installing the new brush, take care to tighten the bearing setscrews and to align the chain tensioner.

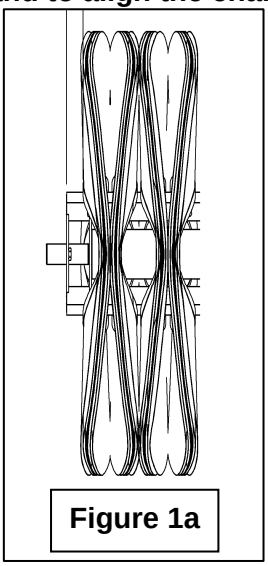
Figure 1a

60" AND 72" ROTARY BROOMS WITH 22" DIAMETER BRUSHES

NOTE: The Brush kit may contains 1 more brush, as to compensate, if necessary, for the variations of the brushes tolerance.

Important: Replace the brushes when the diameter reaches 15".

1. Place the tractor mounted with the broom on a clean, flat and level surface. Put the transmission in neutral, apply the parking brake, raise the broom with the lifting mechanism, turn off the engine and wait for the brush to stop turning completely.
2. **Figure 2:** Remove the chain idler (item 1) from the broom housing (item 2) by removing the 3/8"NC nylon insert locknut (item 3), the 3/8" lockwasher (item 4) and the 3/8" flat washer (item 5).
3. **Figure 2a:** Place the two engagement levers (item 4) in the "A" position and, using the tractor's hydraulic lever, lower the broom so the brush touches the ground.
4. **Figure 2a:** Remove the 1/2"NC x 1 1/4"lg hex. bolts (item 1) , the flat washers 3/8" (item 6) and the 1/2"NC serrated flange nuts (item 2) from the brush support right side bearing (item 3).
5. **Figure 2a:** Place the engagement levers (item 4) to position "B" to release the brushes from the broom housing (item 5). If the brushes aren't released sufficiently from the broom, raise the broom as needed with the subframe lift mechanism.
6. **Figure 2b:** Remove the three 5/16"NC x 1" lg. hex bolts (item 2), the three 5/16" lockwashers (item 3) and the retaining plate (item 1) from the brush support (item 5). Take off all the brushes (item 4) from the brush support (item 5).

IMPORTANT: If you decide to install half steel/half polypropylene brushes, you must start and finish with a polypropylene brush.

7. **Figure 2b:** Install each brush (item 4) in the opposite direction of the one next to it (see **Figure 2c**). The two pins on each brush (item 4a) that secure the brushes to the support must be alternated 120° (1/3 of a turn) to obtain a balanced distribution on each of the support's three square tubes (item 5a).
8. **Figure 2b:** Secure the brushes with the retaining plate (item 1), the three. 5/16"NC x 1" lg. hex bolts (item 2) and the three 5/16" lockwashers (item 3).
9. **Figure 2a:** Lower the broom housing (item 5) by moving the engagement levers (item 4) in the "A." position. If the housing is too high to align the holes of bearing (item 3) with those of the housing (item 5) , lower the housing as needed with the subframe lift mechanism.
10. **Figure 2a:** Attach the brush support bearing (item 3) with the two 1/2"NC x 1 1/4"lg hex bolts (item 1), the 3/8" flat washers (item 6) and 1/2"NC serrated flange nuts (item 2).
11. **Figure 2:** Reinstall the chain idler (item 1) with the 3/8"NC nylon insert locknut (item 3), 3/8" lockwasher (item 4) and the 3/8" flat washer (item 5). Refer to figure 14 instructions for the proper chain adjustment.

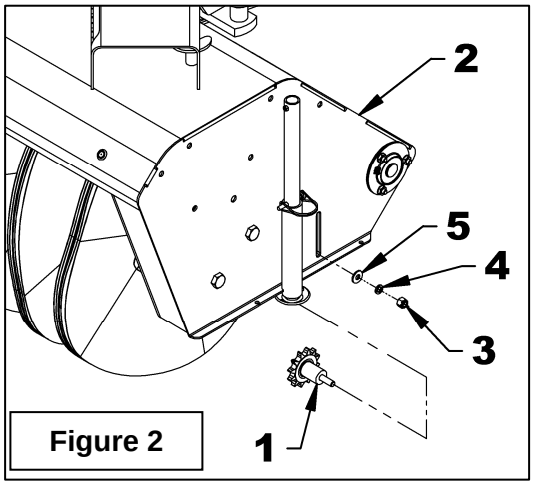

Figure 2

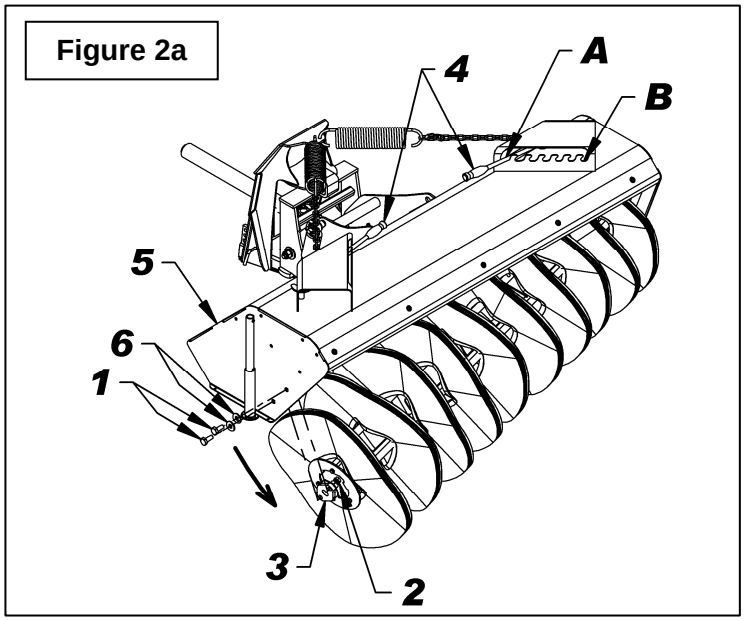

Figure 2a

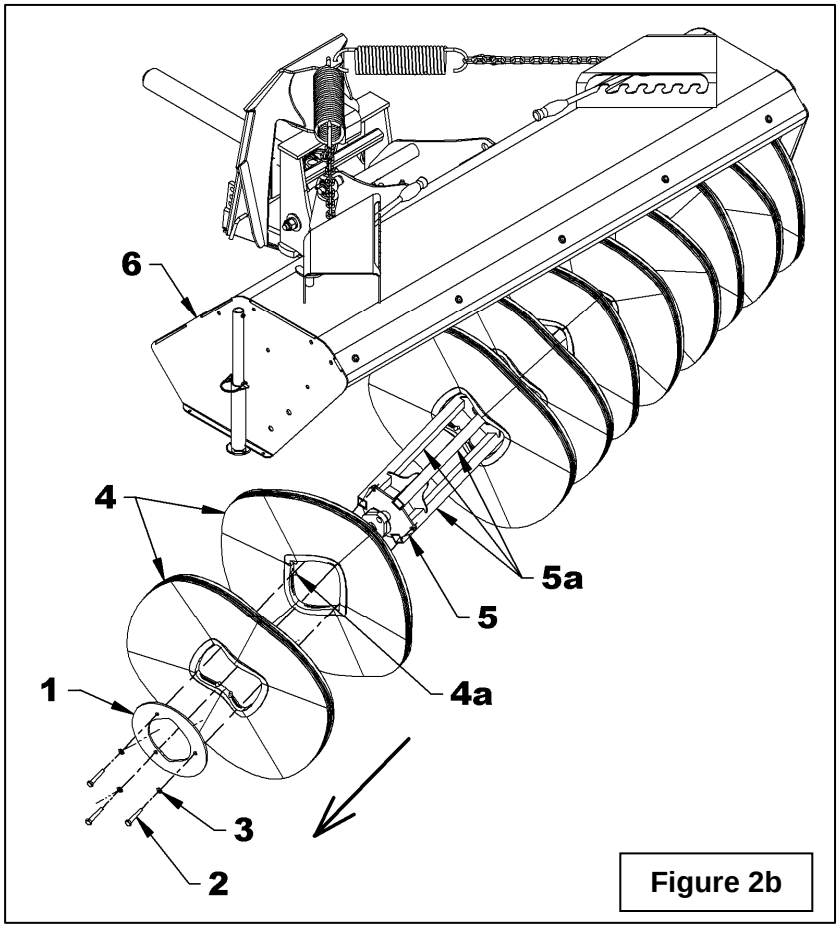

Figure 2b

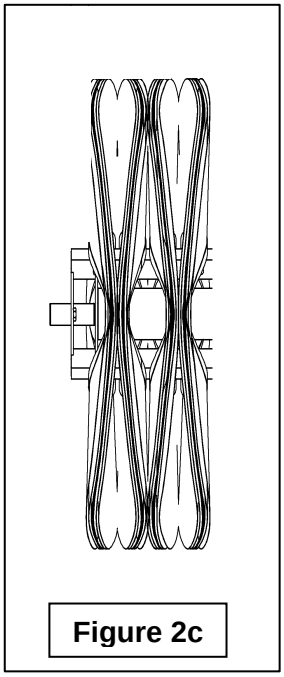

Figure 2c

60", 72" & 84" ROTARY BROOMS – MECHANIC - WITH 32" DIAMETER BRUSH

(Figures 3-3a-b-c-d-e)

NOTE: The Brush kit may contains 1 more brush, as to compensate, if necessary, for the variations of the brushes tolerance.

Replace the brushes when the diameter reaches 18".

1. Place the tractor mounted with the broom on a clean, flat and level surface. Put the transmission in neutral, apply the parking brake, raise the broom with the lifting mechanism, turn off the engine and wait for the brush to stop turning completely.
2. **Figure 3a:** Remove the square wire lock pins (item 1) from the front parking stands and secure them in position 2A with the square wire lock pins (item 1).
3. **Figure 3b:** Remove the square wire lock pin (item 1) from the rear parking stand and secure it in one of the holes of position 2A with the square wire lock pin (item 1).
4. **Figure 3b-c:** Lower the broom to the ground with the tractor's control lever (**fig 6e**, item 1) and make sure the broom rests securely on its three parking stands. If it's not the case, raise the broom and secure the rear parking stand in another hole of position 2A and lower the boom to the ground.
5. **Figure 3d:** Detach the brush cover (item 2) by removing the five 5/16"NC x 1/2" lg serrated flange bolts, the four 5/16"NC x 3/4" lg serrated flange bolts and the two 5/16"NC serrated flange nuts (items 1-3-6).
6. **Figure 3e:** Place a wooden block (item 1) under the broom housing (item 2) making sure the housing tube (item 2) is maintained parallel to the ground.
7. **Figure 3e:** Remove the bolts, the flat washers and the nuts (items 4-5-6) fastening the bearing (item 7) to the right lateral plate (item 3).
8. **Figure 3e:** Take off the right lateral plate (item 3) by removing the six bolts, flat washers and nuts (items 8-9-10).
9. **Figure 3e:** Remove the four bolts, the lockwashers (items 12-13) and the retaining plate (item 11) then remove the brushes (item 14) from the brush support (item 15).
10. **Figure 3e:** Clean the brush support and do a visual inspection to detect any signs of damage or cracks and repair if necessary before installing the new brushes.
11. **Figure 3e:** Install the new brushes on the support making sure to align the inside guides on each side of the support's square tubes and to turn each brush 180º as seen on figure.
12. **Figure 3e:** Shake the brushes (item 14) before reinstalling the retaining plate (item 11) to compact them.
13. **Figure 3e:** Reinstall the retaining plate (item 11) and secure in place with four 3/8"NC x 2 1/2" hex. bolts and 3/8" lockwashers (items 12-13). There can be no space between the brushes once the retaining plate is installed.

    IMPORTANT Figure 3e: Before reinstalling the right lateral plate (item 3), make sure the housing tube (item 2) is parallel to the ground.
14. **Figure 3e:** Reinstall the right lateral plate (item 3) with the six 1/2"NC x 1 1/4" lg bolts, 1/2" flat washers and 1/2"NC serrated flange nuts (items 8-9-10).
15. **Figure 3e:** Reinstall the bearing (item 7) on the right lateral plate (item 3) with the two 1/2"NC x 1 1/2"lg bolts, the 1/2" flat washers and the 1/2"NC serrated flange nuts (items 4-5-6).
16. **Figure 3d:** Reinstall the brush cover (item 2) with the five 5/16"NC x 1/2" lg serrated flange bolts, the four 5/16"NC x 3/4" lg serrated flange bolts and the two 5/16"NC serrated flange nuts (items 1-3-6).

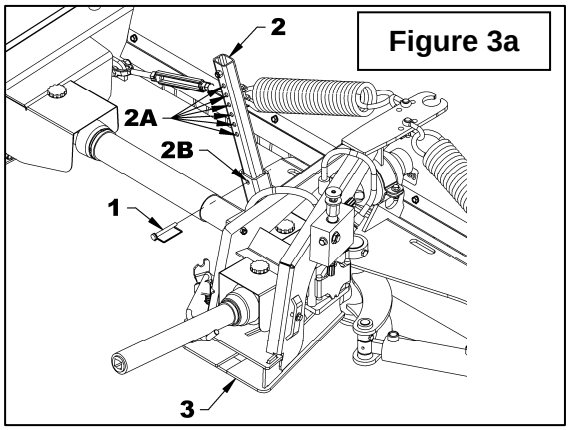

Figure 3a

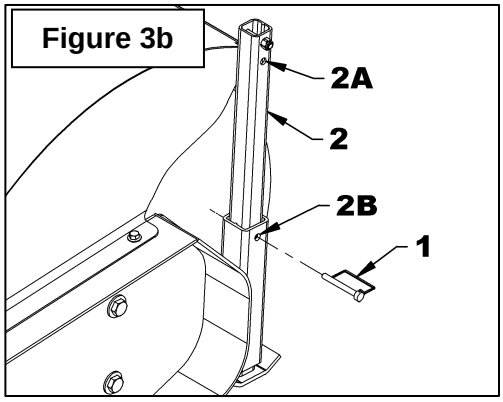

Figure 3b

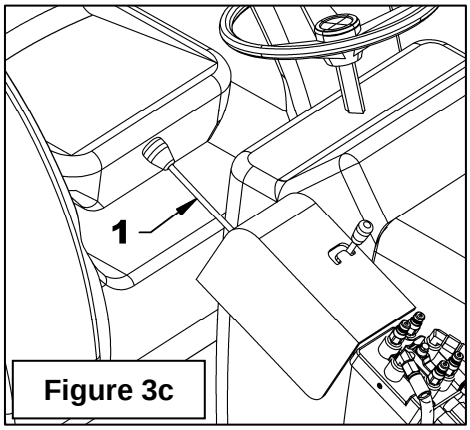

Figure 3c

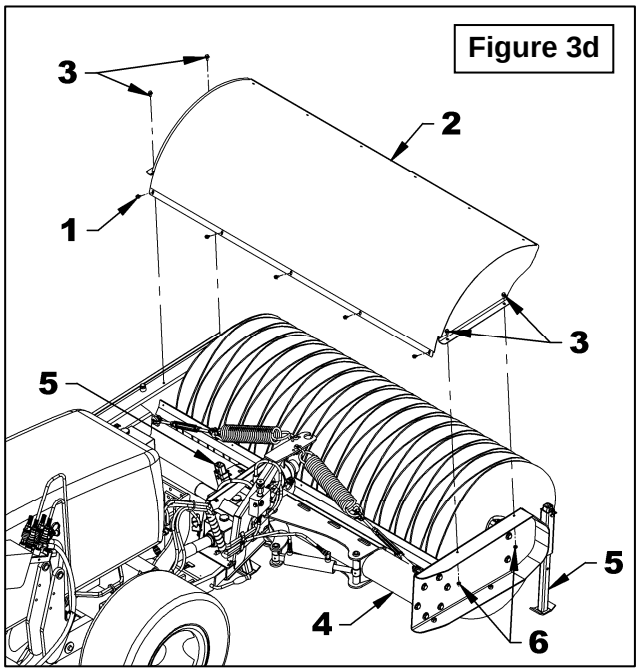

Figure 3d

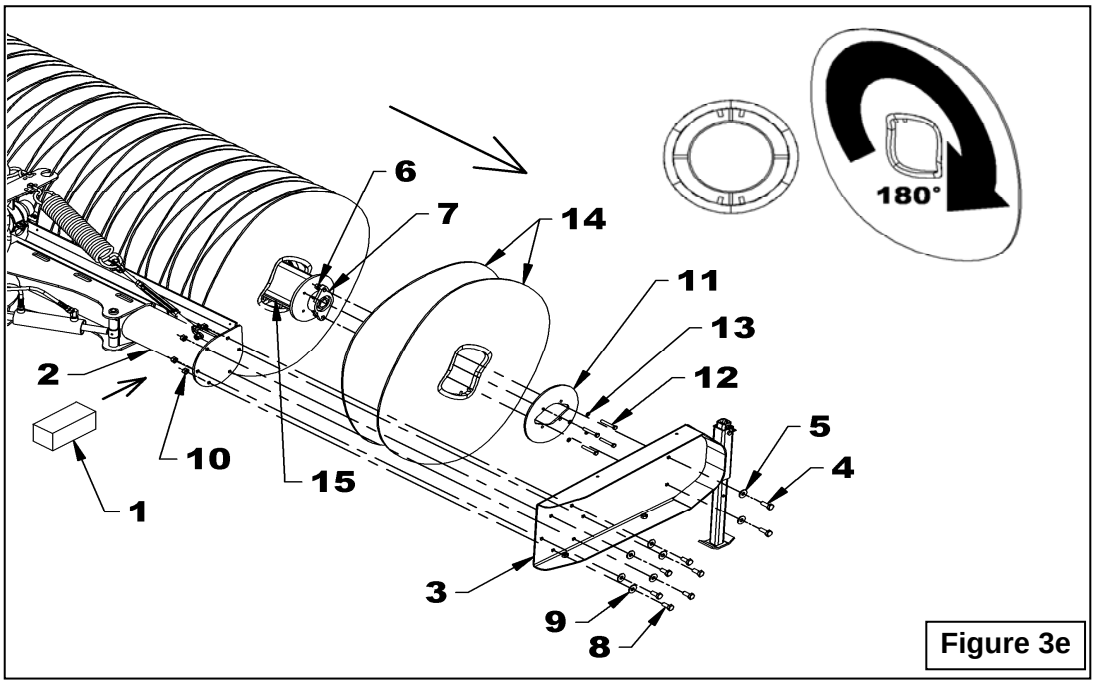

Figure 3e

60", 72" & 84" ROTARY BROOMS – HYDRAULIC - WITH 32" DIAMETER BRUSH

(Figure 4)

NOTE: The Brush kit may contains 1 more brush, as to compensate, if necessary, for the variations of the brushes tolerance.

Replace the brushes when the diameter reaches 18".

NOTE: The broom does not need to be attached to the vehicle to replace the brush.

1. Set the rotary broom on the four parking stands (item 13).
2. Remove the four 1/2"NC x 2 1/2" allen socket head cap screws (item 1) and the four 1/2"NC nylon insert nuts (item 2) holding the hydraulic motor (item 3).
3. If there are two motors, remove the second motor in the same way and go to step 5.
4. Remove the two 1/2"NC x 1 1/2" hex bolts (item 5) and the two 1/2"NC nylon insert nuts (item 6) holding the bearing.
5. Remove the brush support and the bearing from the broom housing (item 8).
6. Remove the four 3/8"NC x 2 1/2" hex. bolts (item 9), the four lockwashers (item 10) and the retaining plate (item 11).
7. Remove the brushes (item 12) from the brush support (item 8).
8. Clean the brush support (item 8) and do a visual inspection for any signs of damage or cracks and repair if needed before installing the new brushes.
9. For brooms with only one motor, check for any sign of wear on the drive plate at the end of the brush support. Make sure the six or twelve nuts (if 2 motors) holding the drive plate(s) are tightened at 55 lb/ft.

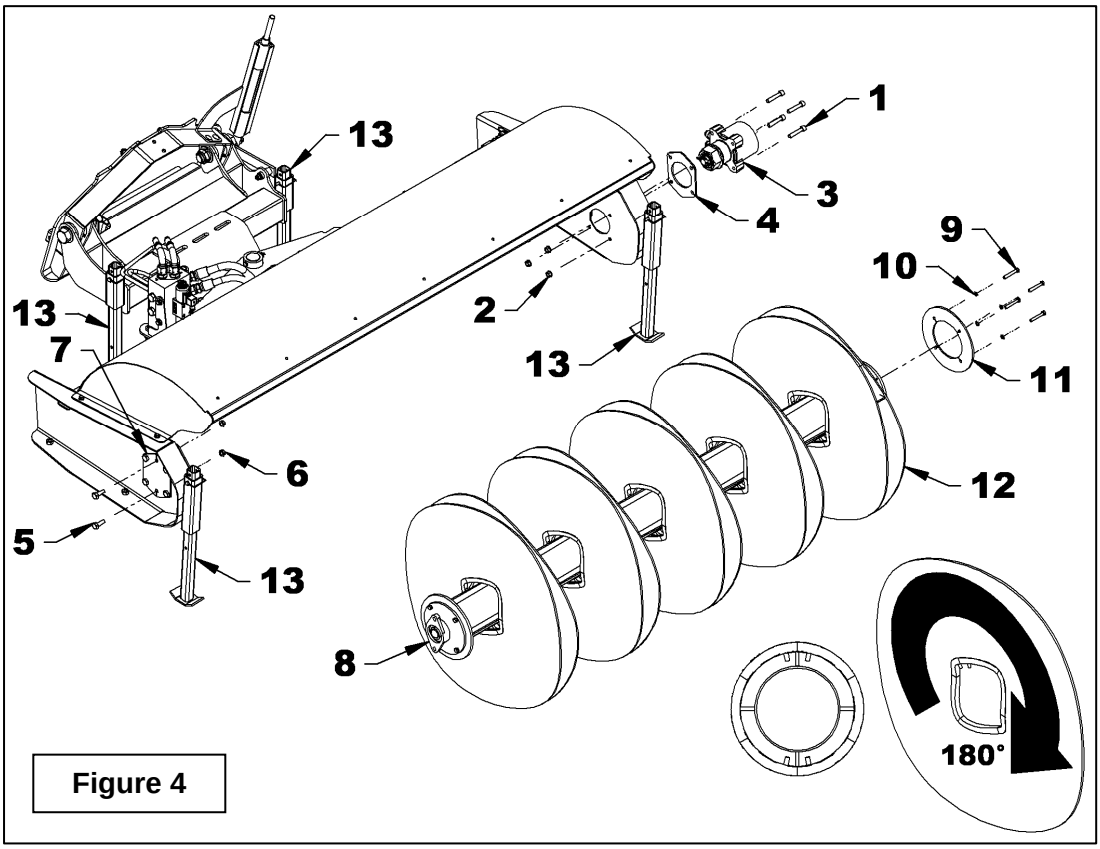

Figure 4

10. Install the new brushes (item 12) on the brush support (item 8) by aligning the guides on each side of one of the brush support tubes and rotating each brush 180° (see figure 4).

11. Shake the brushes (item 12) before installing the retaining plate (item 11) to compress them.

12. Reinstall the retaining plate (item 11) and secure in place with the four 3/8" NC x 2 1/2" hex. bolts and the four lockwashers (items 9-10). There should be no gap between the brushes once the retaining plate is installed.

13. Place the brush support (item 8) under the broom cover.

If the broom is fitted with only one motor:

14. Lift the brush support (item 8) with a jack. Insert the bearing in its opening placing the grease fitting toward the outside and attach to the support plate (item 7) with the two 1/2" NC x 1 1/2" hex. bolts (item 5) and the two 1/2" NC serrated flange nuts (item 6). The holes must align perfectly or the broom might bounce.

15. Move the jack at the end where the electric motor (item 3) is installed. Raise the brush support (item 8) to align it with the opening in the housing. Insert the hydraulic motor hub (item 3) in the brush support. It might be necessary to turn the brush support to align the hub faces with the drive plate bolted to the brush support.

16. Attach the hydraulic motor (item 3) and its spacer (item 4) to the broom housing with the four 1/2" NC x 2 1/2" allen socket head cap screw (item 1) and the four 1/2"NC serrated flange nuts (item 2).

NOTE: If the hydraulic motor (item 3) is too tight against the brush support (item 12), add the 1/8" spacer included in the hardware box.

If the broom is fitted with two motors:

17. Move the jack at the end where the left electric motor (item 3) is installed. Raise the brush support (item 8) to align it with the opening in the housing. Insert the hydraulic motor hub (item 3) in the brush support. It might be necessary to turn the brush support to align the hub faces with the drive plate bolted to the brush support.

18. Attach the hydraulic motor (item 3) and its spacer (item 4) to the broom housing with the four 1/2" NC x 2 1/2" allen socket head cap screw (item 1) and the four 1/2"NC serrated flange nuts (item 2).

19. Follow the same procedure to install the right motor.

INDEX

47" and 60" Rotary Brooms with 18" diameter brush 1
60" and 72" Rotary Brooms with 22" diameter brush 2-3
60", 72" and 84" Rotary Brooms – MECHANIC - with 32" diameter brush 4-5
60", 72" and 84" Rotary Brooms – HYDRAULIC - with 32" diameter brush 6-7